Industrial

2. Features

Hi-Pot: 3000 VAC

Comply with IEC62368

≥98% Efficiency

ROHS Reach Compliant

Operating Temperature Range -40 to +125

3. Picture

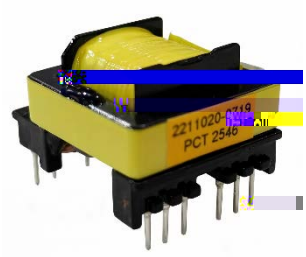

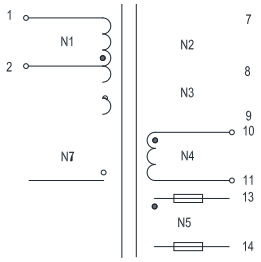

5. Dimension Unit : mm

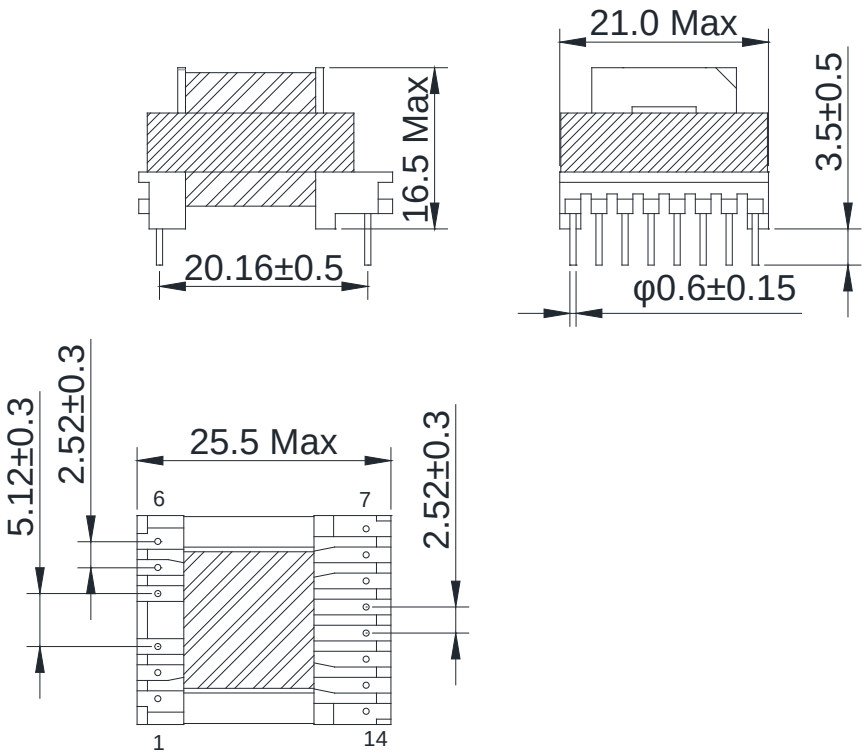

6. Electrical Characteristics

Electrical Specifications@25											
Part NO.	Output power(W)	Inductance (uH) 200KHz,1V	Lk(uH) 200KHz,1V	Turns Ratio 20KHz,1V	DCR (mΩ MAX)						HI-POT(VAC 5mA/60S
					3-1	5-4	7-8	8-9	10-11	13-14	
2211020-0719	16	3-1	3-1	N1+N6:N2:N3:N4:N5:N7							PRI-SEC

Tel (86 769)8652 8122
http://www.pcthk.com
Company: PCT DONGGUAN ELECTRICAL CO., LTD
Address Xiang Xi Ind. Zone, Shi Pai Town, Dongguan, Guangdong, CHINA (Postal Code 523345)